DRAIN CLEANER
H-75

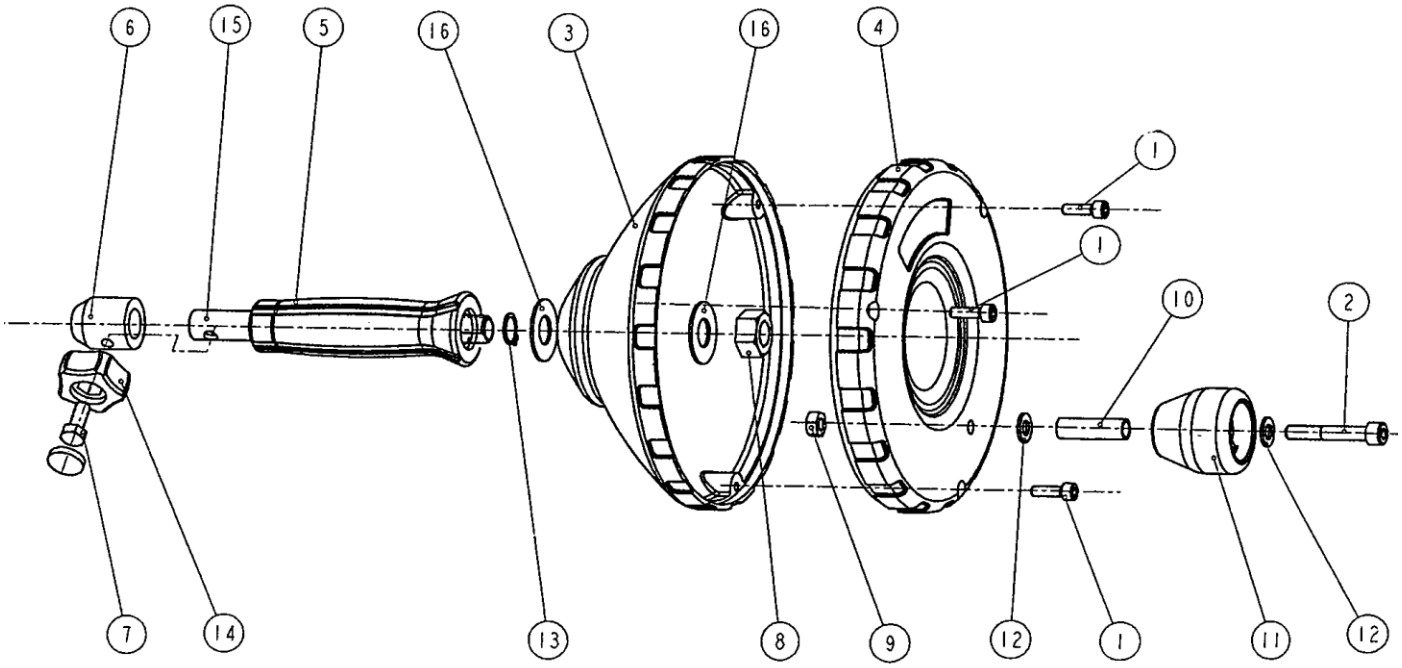

更新日 2017/10/25

DRAIN CLEANER
H-75

Asada

Ref. No.	Code No.	Parts Name	Qty	Remark
1	80340	STOP BOLT 6 x 25	3	
2	80346	STOP BOLT 8 x 60	1	
3	DH111	DH1 DRUM F	1	
4	DH112	DH1 DRUM R	1	
5	DH114	DH1 GRIP	1	
6	DH115	DH1 COLLAR	1	
7	80114	HEX BOLT M8 x 20	1	
8	81087	U NUT 16	1	
9	81040	U NUT 8	1	
10	DH117	DH1 COLLAR FOR KNOB	1	
11	DH116	DH1 KNOB	1	
12	81151	PLAIN WASHER 8	2	
13	83322	C SNAP RING RING S-16	1	
14	70631	SUPER KNOB SK－38	1	
15	DH113	DH1 SHAFT	1	
16	DH120	DH1 WASHER	2	

更新日 2017/10/25