DRAIN CLEANER
H-150

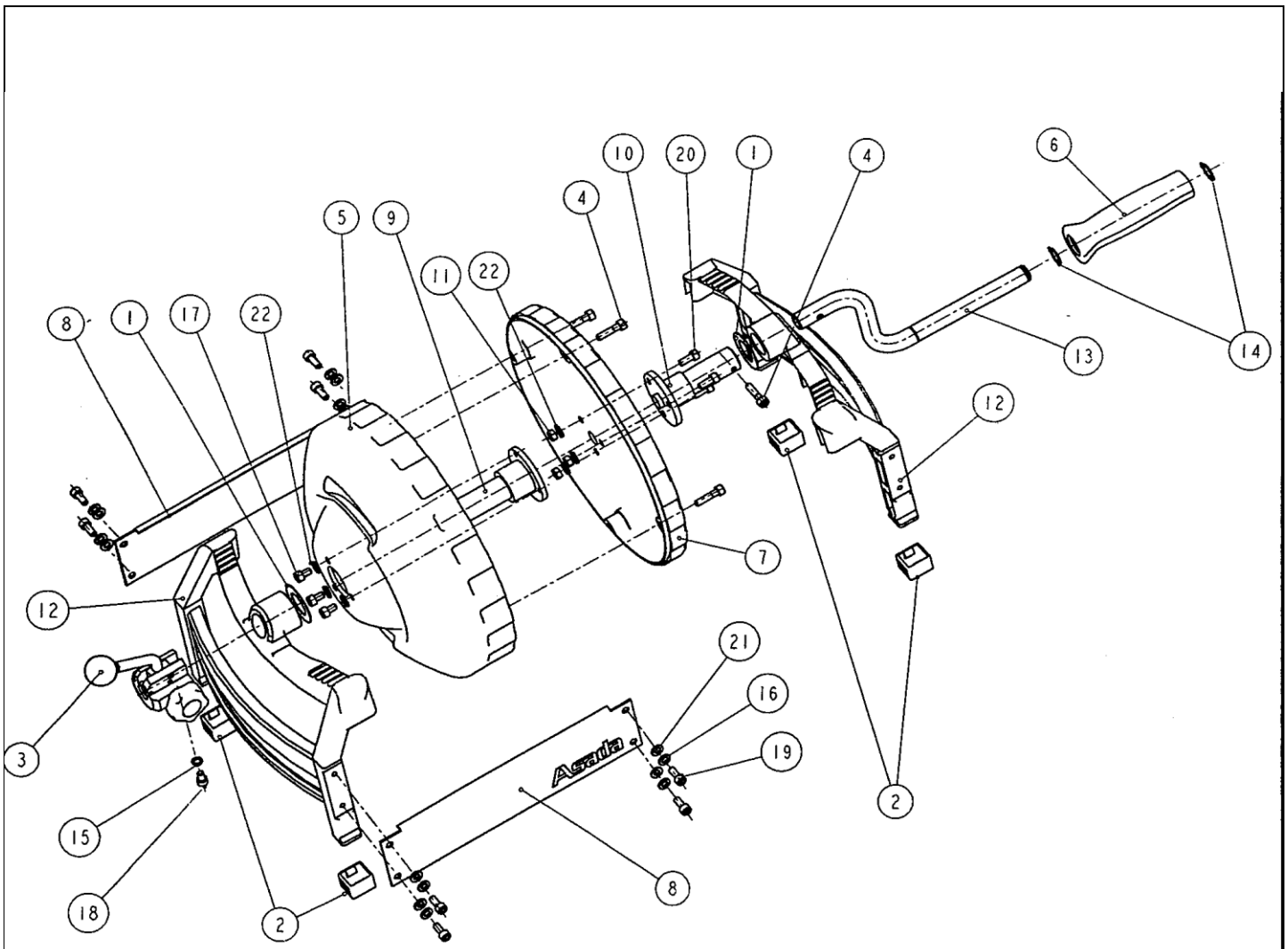

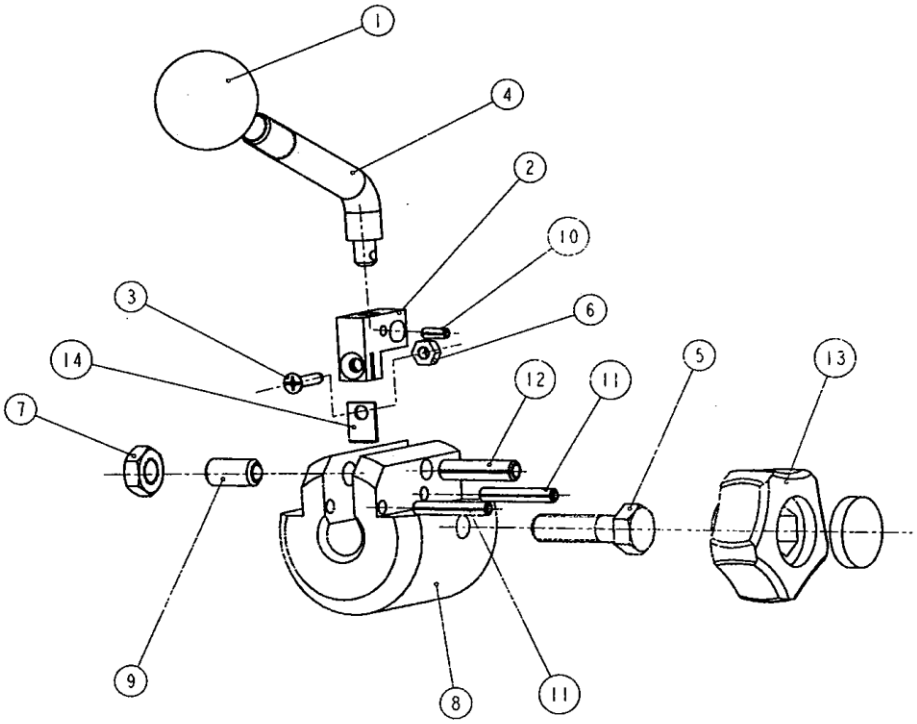

ISSUED 2017/10/25

DRAIN CLEANER
H-150

Asada

Ref. No.	Code No.	Parts Name	Qty	Remark
BODY				
1	81176	THRUST WASHER AS2542	2	
2	DH222	DH2 CAP FOR LEGS	4	
4	80340	STOP BOLT 6x25	5	
5	DH211	DH2 DRUM F	1	
6	DH114	DH1 GRIP	1	
7	DH213	DH2 DRUM R	1	
8	DH216	DH2 PLATE	2	
9	DH212	DH2 SHAFT F	1	
10	DH214	DH2 SHAFT R	1	
11	81042	U-NUT M6	3	
12	DH215	DH2 LEG	2	
13	DH217	DH2 HANDLE SHAFT	1	
14	83503	C SNAP RING ISTW-17	2	
15	81263	SPRING WASHER 6	1	
16	81118	SPRING WASHER M6 (CHROM)	8	
17	80161	STOP BOLT 6x10	3	
18	80162	STOP BOLT 6x12	1	
19	80615	STOP BOLT 6x15	8	
20	80166	STOP BOLT 6x20	3	
21	81155	PLAIN WASHER	8	
22	81146	WASHER M6	6	
CHUCK PART				
1	70633	PLASTIC BALL	1	
3	82298	HEAD SCREW M4×12	1	
5	80115	HEX BOLT M8×30	1	
6	81028	HEX NUT M4	1	
7	81020	HEX NUT 8	1	
8	DH223	DH2 CHUCK BODY	1	
9	70632	BALL PLUNGER	1	
11	83085	R-PIN 4x25	2	
12	83039	PIN 6x25	1	
13	70631	SUPER KNOB SK-38	1	
14	DH225	DH2 CHUCK JAW	1	
SET	DH229	CHUCK HANDLE	1	(NO. 2, 4, 10)

ISSUED 2017/10/25